BATTERY DISTRIBUTION UNIT - 3 WAY

MTA

- Battery Distribution Units (BDU) to suit Positive or Negative battery terminal.
- Simple connection to battery terminal.
- Double ring battery terminal connection. Positive 19mm / Negative 17mm.
- Two M6 studs and one M8 stud on the unit. Kit version includes terminals.
- Optional clip-on red colour protection cover, labelled with (+) symbol.

UPDATED

Part Number	Description
1507701K	BDU Kit - 3 Way Positive includes red cover & 3 x terminals.
1507704K	BDU Kit - 3 Way Negative includes 3 x terminals. No cover.
1507701	3 Way Positive battery distribution unit.
4510503	Red coloured clip-on housing. Suit (+) Positive BDU only.
1507704	3 Way Negative battery distribution unit.
1606770	M6 Screw 90 degree terminal 10-20mm².
1606785	M8 Screw 90 degree terminal 25-40mm².

Red Clip-on Housing

1606770
M6 hole

1606785
M8 hole

Battery Distribution Unit

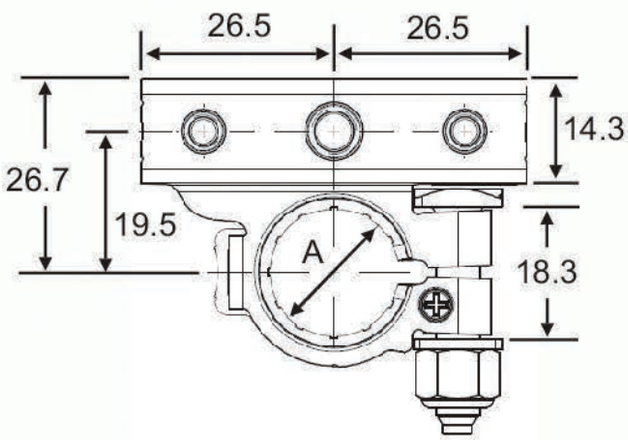

(+) Positive Terminal 'A' = 19mm
(-) Negative Terminal 'A' = 17mm

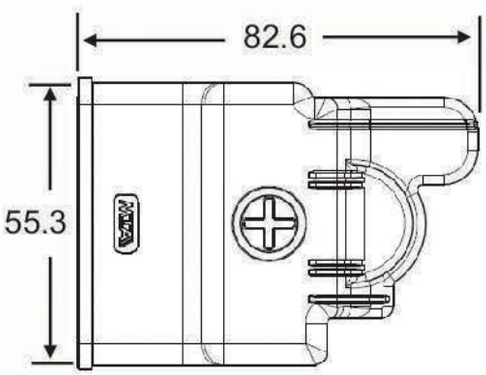

Terminals Fitted

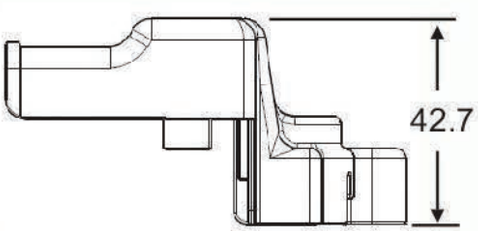

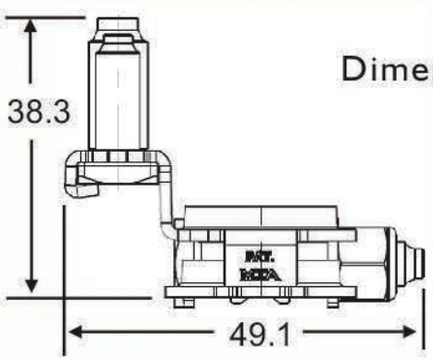
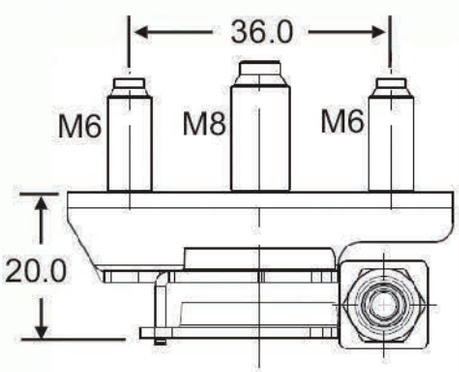
Dimensions in MM