WAECO
by Dometic GROUP

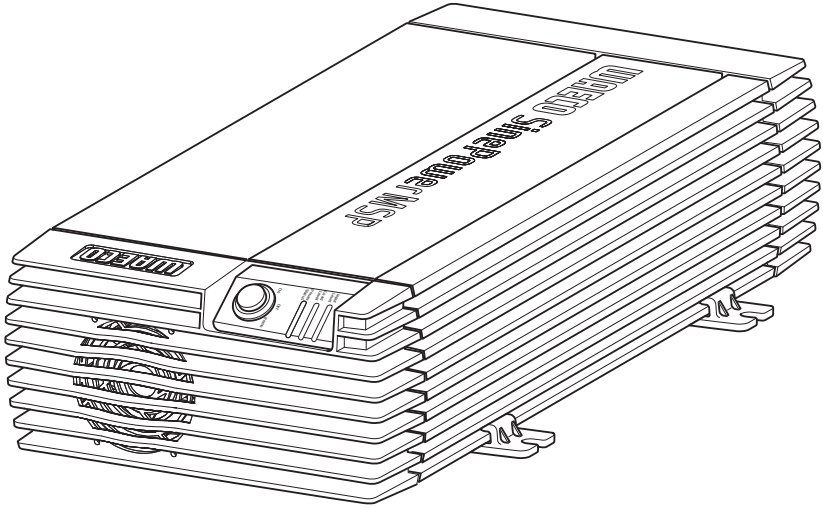

SinePower MSP 702, MSP 704, MSP 1012, MSP 1024, MSP 1512, MSP 1524, MSP 2012, MSP 2024, MSP 2512, MSP 2524

D

Fordern Sie weitere Informationen zur umfangreichen Produktpalette aus dem Hause Dometic WAECO an. Bestellen Sie einfach unsere Kataloge kostenlos und unverbindlich unter der Internetadresse: www.dometic-waeco.de

GB

We will be happy to provide you with further information about Dometic WAECO products. Please order our free catalogue with no obligation to buy on our homepage: www.dometic-waeco.com

F

Demandez d'autres informations relatives à la large gamme de produits de la maison Dometic WAECO. Commandez tout simplement notre catalogue gratuitement et sans engagement à l'adresse internet suivante : www.dometic-waeco.com

E

Solicite más información sobre la amplia gama de productos de la empresa Dometic WAECO. Solicite simplemente nuestros catálogos de forma gratuita y sin compromiso en la dirección de Internet: www.dometic-waeco.com

I

Per ottenere maggiori informazioni sull'ampia gamma di prodotti Dometic WAECO è possibile ordinare una copia gratuita e non vincolante del nostro Catalogo all'indirizzo Internet: www.dometic-waeco.com

NL

Maak kennis met het omvangrijke productscala van de firma Dometic WAECO. Bestel onze catalogus gratis en vrijblijvend onder het internetadres: www.dometic-waeco.com

DK

Bestil yderligere information om det omfattende produktudvalg fra Dometic WAECO. Bestil vores katalog gratis og uforpligtende på internetadressen: www.dometic-waeco.com

S

Inhämta mer information om den omfattande produktpaletten från Dometic WAECO: Beställ våra kataloger gratis och utan förpliktelser under vår Internetadress: www.dometic-waeco.com

N

Be om mer informasjon om det rikholdige produktutvalget fra Dometic WAECO. Bestill vår katalog gratis uforbindtlig på Internettadressen: www.dometic-waeco.com

FIN

Pyytäkää lisää tietoja Dometic WAECOn kattavista tuotevalikoimista. Tilatkaa tuotekuvastomme maksutta ja sitoumuksetta internet-osoitteesta: www.dometic-waeco.com

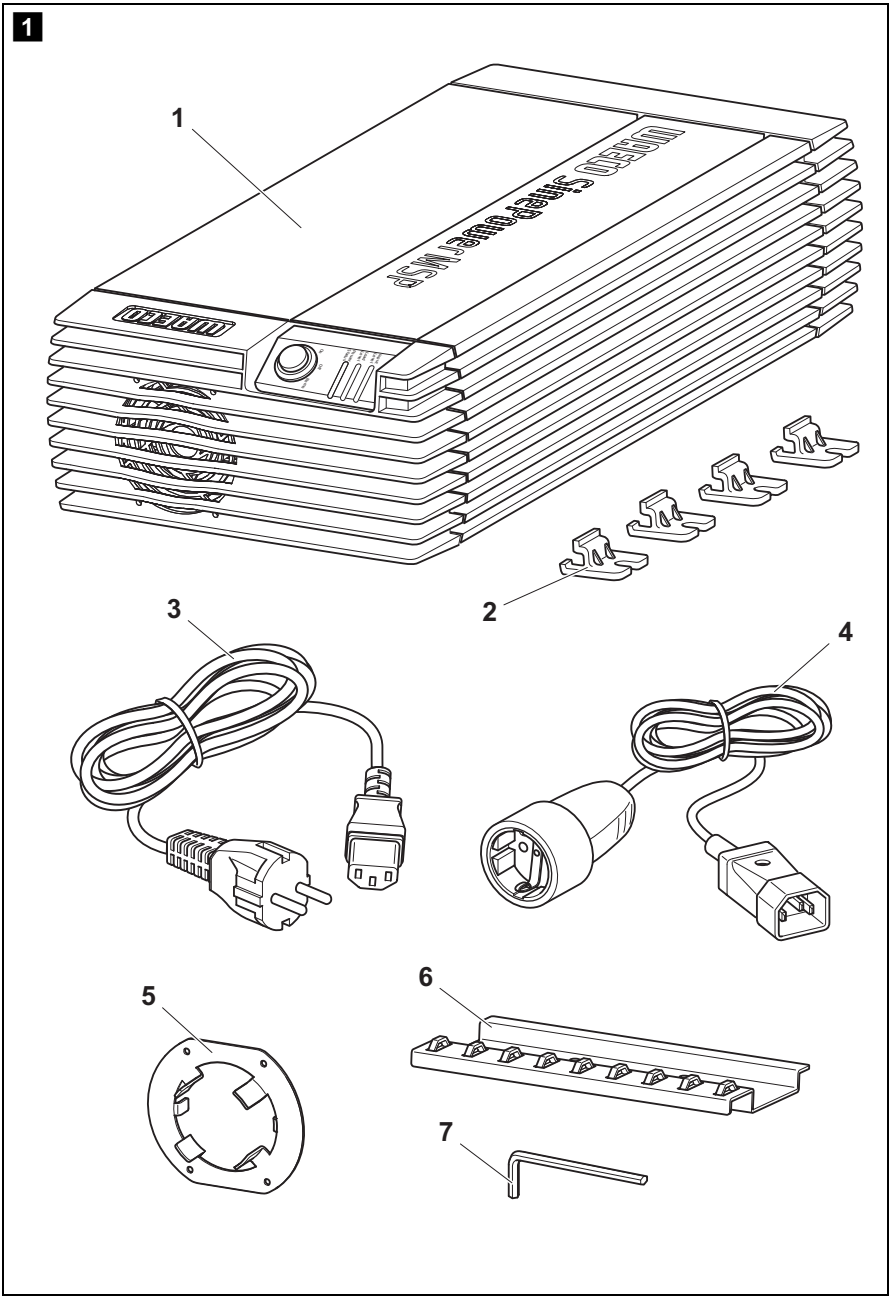
1
1
2
3
4
5
6
7

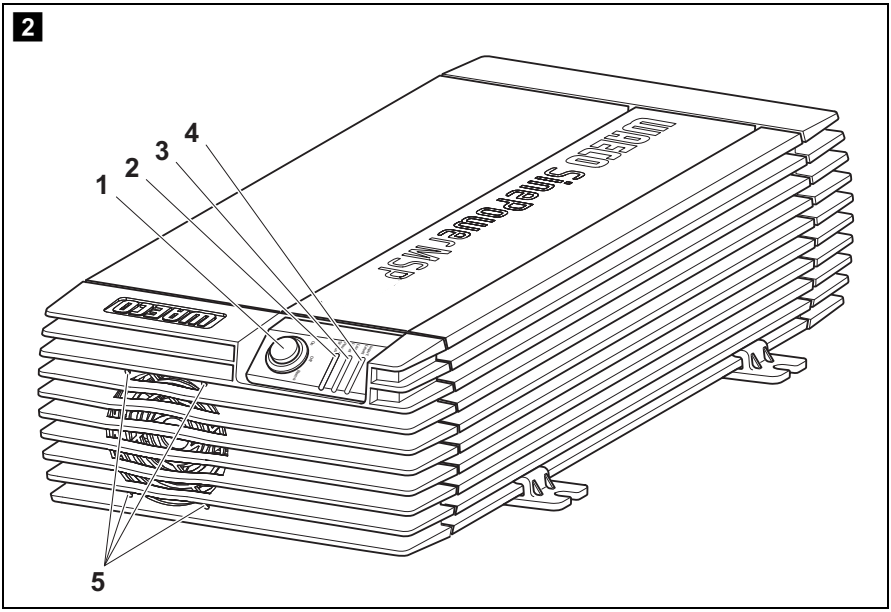
2
1
2
3
4
5

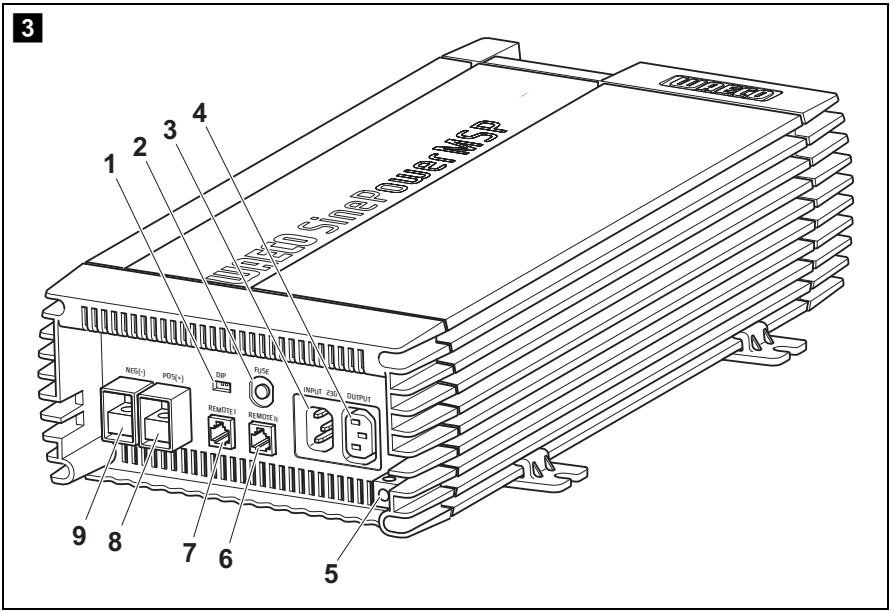
3
1
2
3
4
NEG(-)
POS(+)
DIP
FUSE
REMOTE I
REMOTE II
INPUT
OUTPUT
9
8
7
6
5

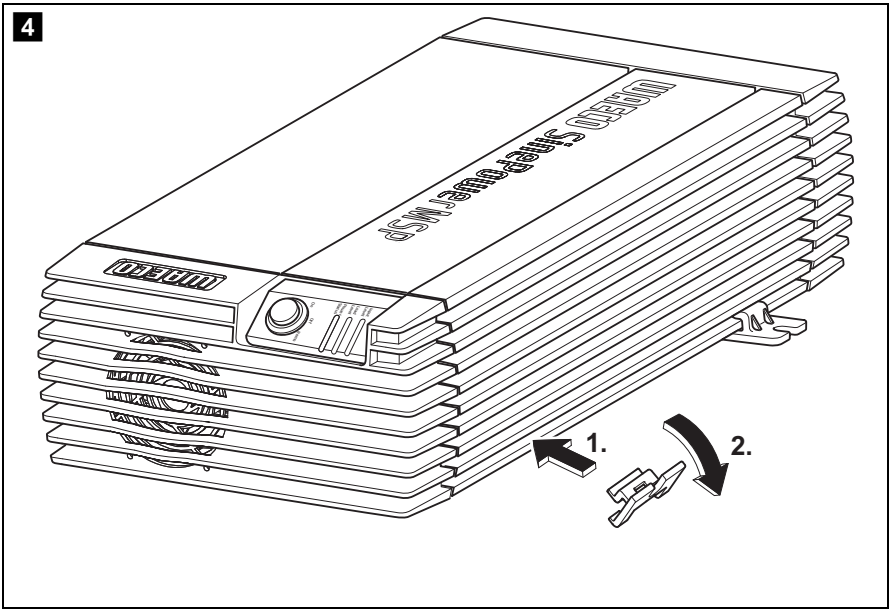
4
1.
2.

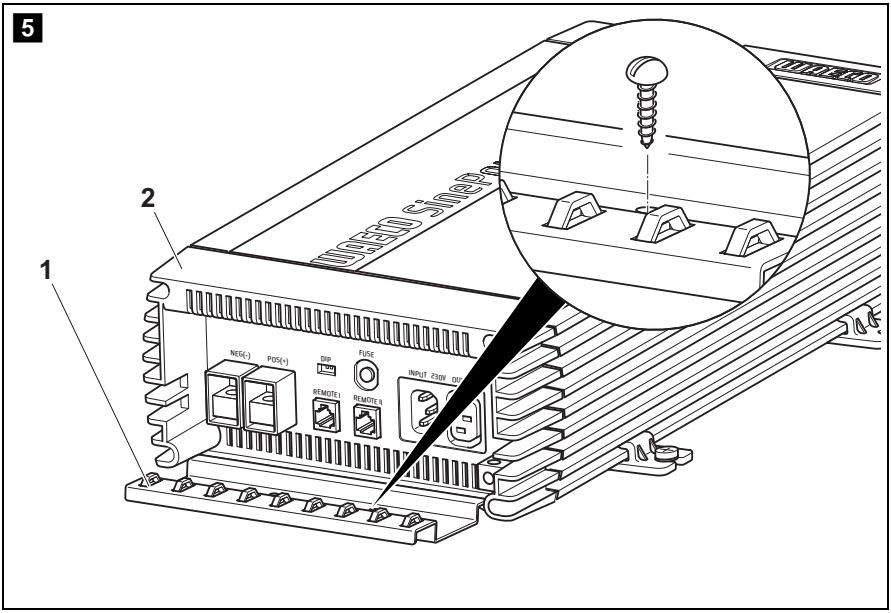
5
1
2
NEG(-)
POS(+)
DIP
FUSE
REMOTE I
REMOTE II
INPUT 230V

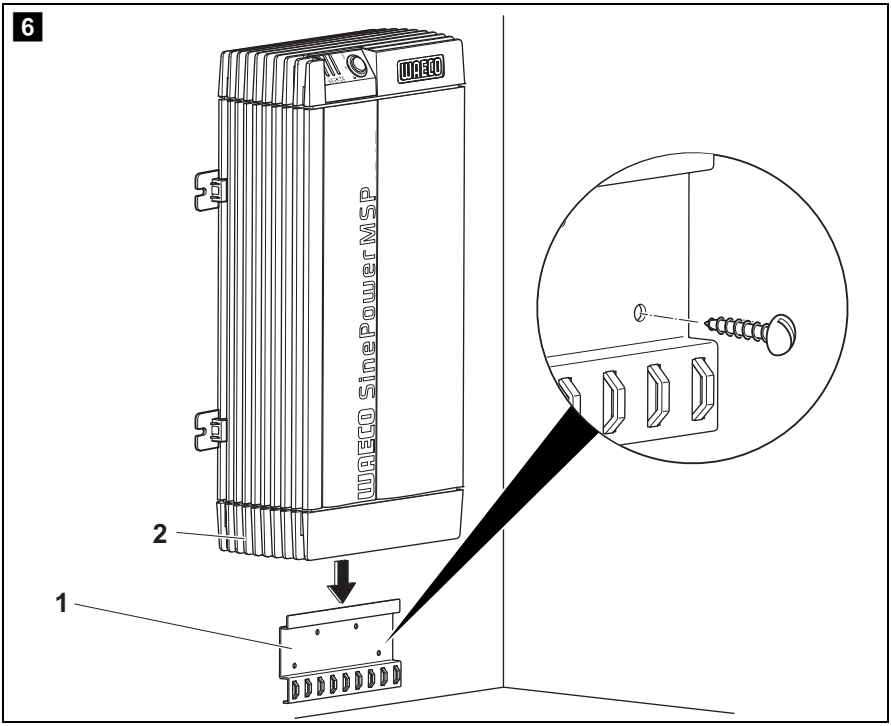
6
WAECO SinePower MSP
2
1

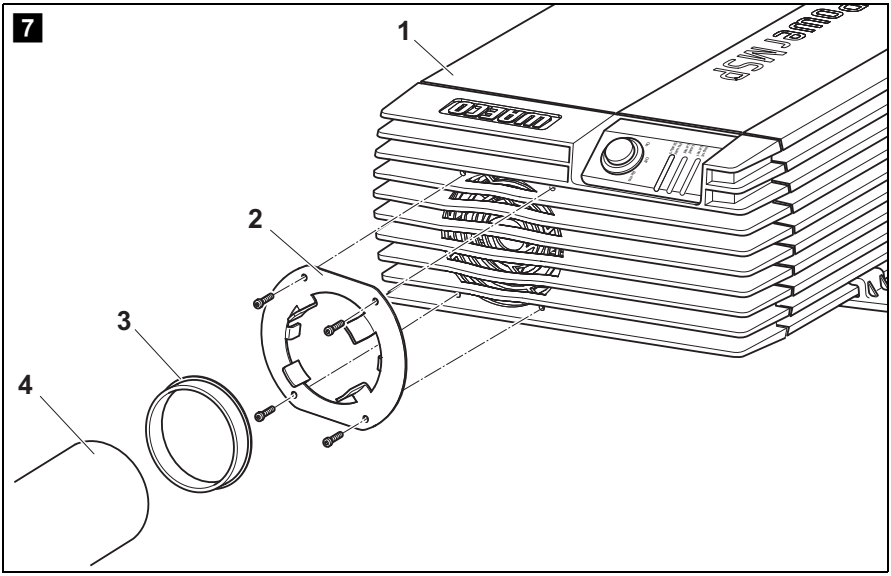
7
1
2
3
4

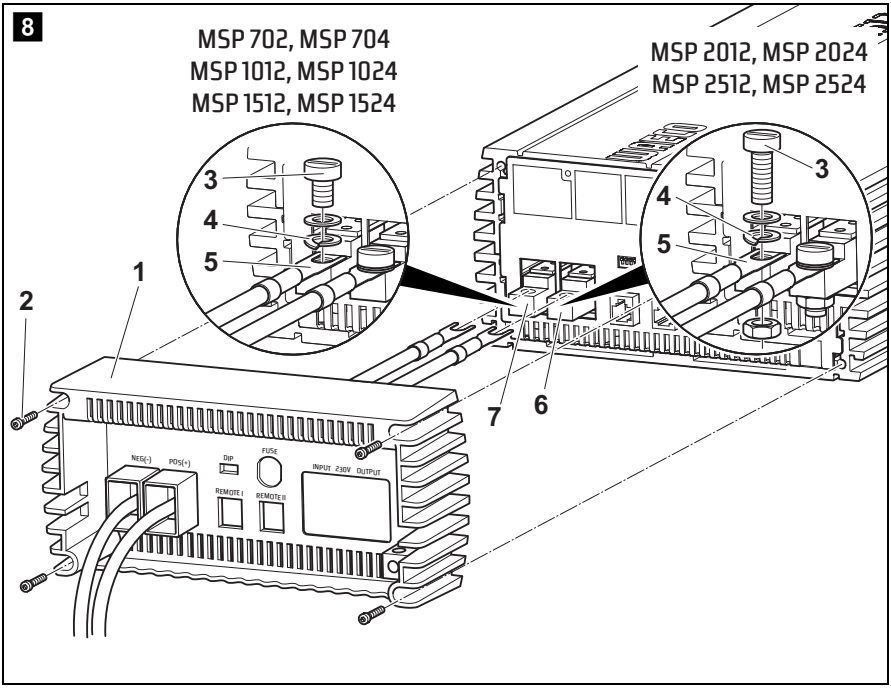
8
MSP 702, MSP 704
MSP 1012, MSP 1024
MSP 1512, MSP 1524
MSP 2012, MSP 2024
MSP 2512, MSP 2524
1
2
3
4
5
6
7
NEG(-)
POS(+)
DIP
FUSE
REMOTE I
REMOTE II
INPUT 230V OUTPUT

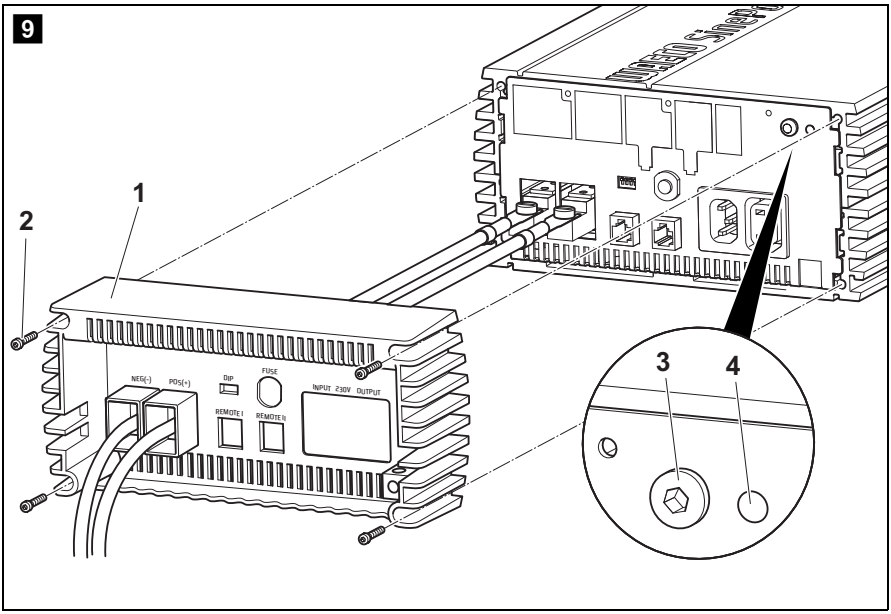
9
1
2
3
4
NEG(-)
POS(+)
DIP
FUSE
REMOTE I
REMOTE II
INPUT 230V OUTPUT

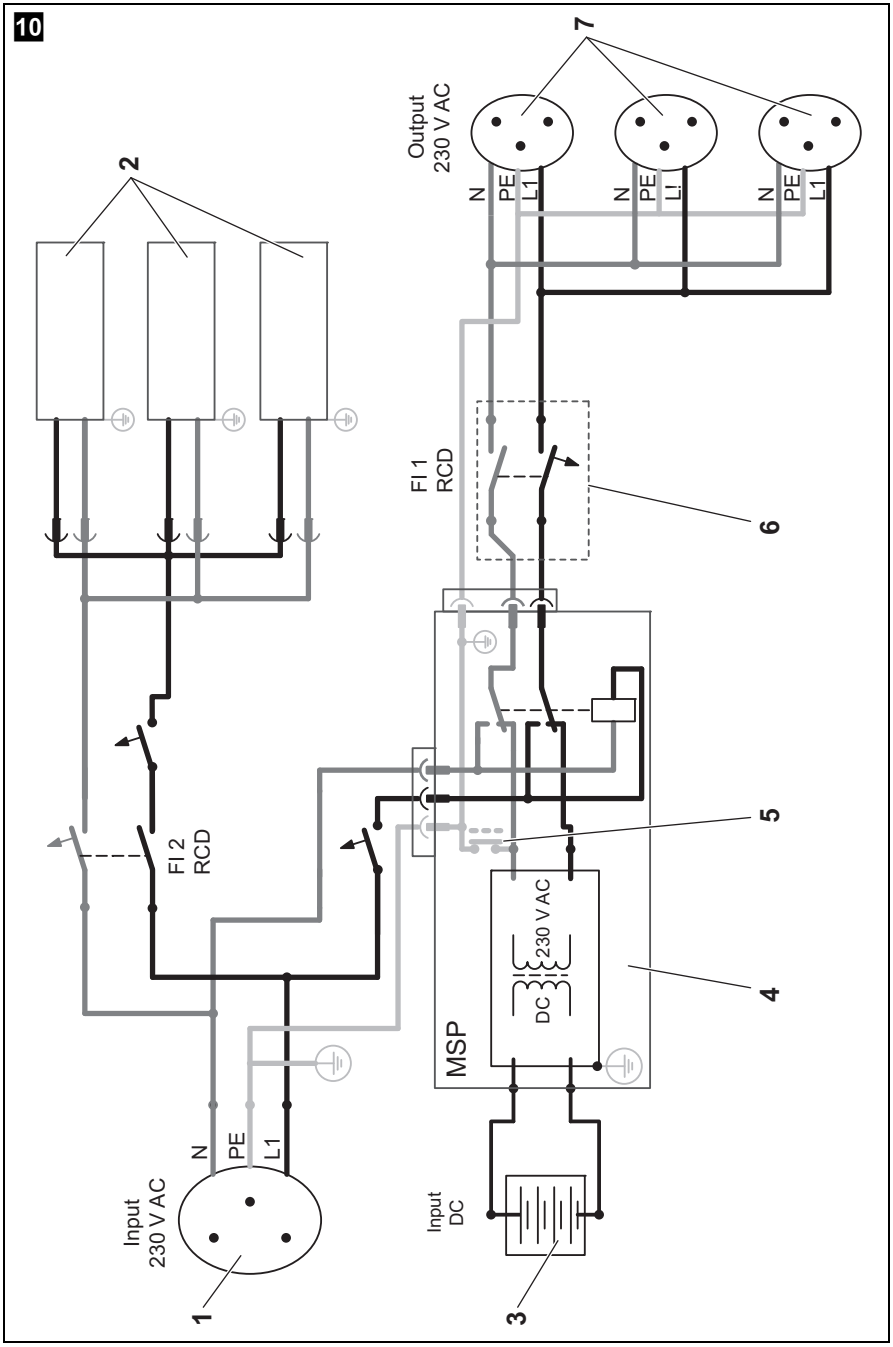
10
Input
230 V AC
N
PE
L1
1
2
FI 2
RCD
MSP
DC
230 V AC
Input
DC
3
4
5
FI 1
RCD
6
Output
230 V AC
N
PE
L1
N
PE
L1
N
PE
L1
7

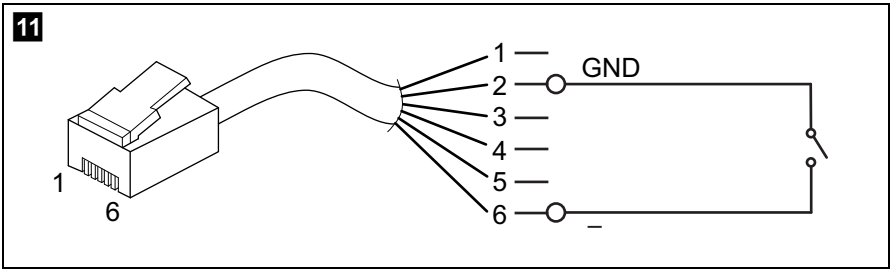
11
1
6
1
2
3
4
5
6
GND
–

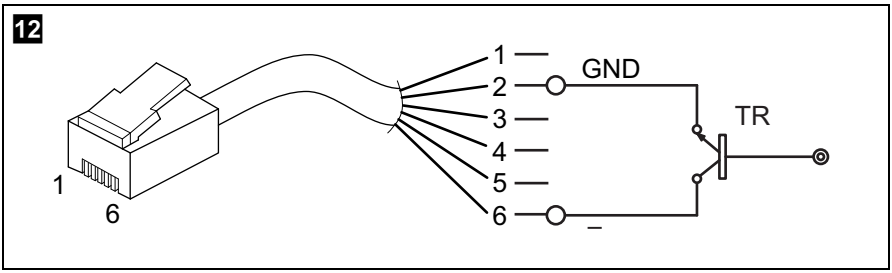
12
1
6
1
2
3
4
5
6
GND
TR
–

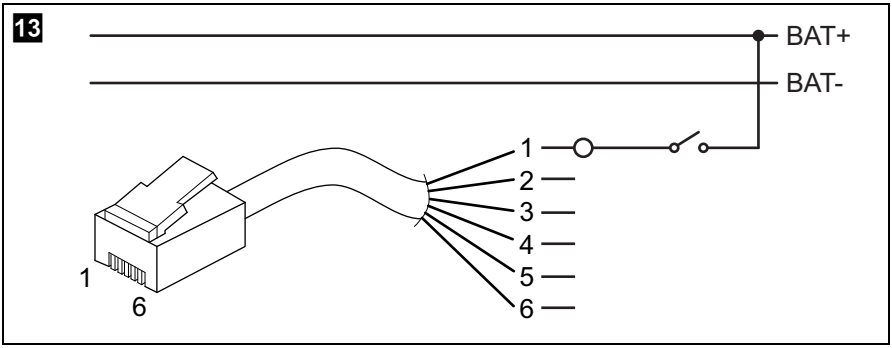
13
BAT+
BAT-
1
6
1
2
3
4
5
6

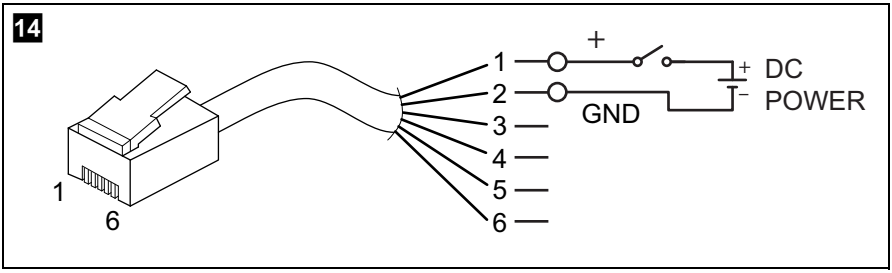
14
1
6
1
2
3
4
5
6
+
GND
+
–
DC
POWER

Please read this instruction manual carefully before first use, and store it in a safe place. If you pass on the product to another person, hand over this instruction manual along with it.

Contents

1 Explanation of symbols

WARNING!
Safety instruction: Failure to observe this instruction can cause fatal or serious injury.

NOTICE!
Failure to observe this instruction can cause material damage and impair the function of the product.

NOTE
Supplementary information for operating the product.

➤ **Action:** This symbol indicates that action is required on your part. The required action is described step-by-step.

✓ This symbol describes the result of an action.

fig. 1 5, page 3: This refers to an element in an illustration. In this case, item 5 in figure 1 on page 3.

2 Safety instructions

The manufacturer accepts no liability for damage in the following cases:

- Damage to the product resulting from mechanical influences and excess voltage
- Alterations to the product without express permission from the manufacturer
- Use for purposes other than those described in the operating manual

Note the following basic safety information when using electrical devices to protect against:

- Electric shock
- Fire hazards
- Injury

2.1 General safety

WARNING!

- During construction of a 230 V∼ socket distribution circuit, it is absolutely essential to have a circuit breaker (residual current circuit breaker) installed and a grounding bridge set by a trained professional, see “Connect multiple appliances” on page 49.
- **Electronic devices are not toys!**
  Keep electrical appliances out of reach from children or infirm persons. Do not let them use the appliances without supervision.
- People (including children) whose physical, sensory or mental capacities or whose lack of experience or knowledge prevent them from using this product safely should not use it without the supervision or instruction of a responsible person.
- Use the device only as intended.
- Do **not** operate the device in a damp or wet environment.
- Do not operate the device near any flammable materials.
- Do not operate the device in areas that are potentially explosive.
- Maintenance and repair work may only be carried out by qualified personnel who are familiar with the risks involved and the relevant regulations.

2.2 Safety when installing the device

WARNING!

- Ensure the device is standing firmly.
  The device must be set up and fastened in such a way that it cannot tip over or fall down.
- Take the precautions necessary to ensure that children cannot interfere with operation. Dangerous situations may occur which cannot be recognised by children!
- Do not expose the device to a heat source (such as direct sunlight or heating). Avoid additional heating of the device in this way.

For installation on boats

WARNING!

- If electrical devices are incorrectly installed on boats, corrosion damage might occur. Have the inverter installed by a specialist (marine) electrician.

Electrical cables

WARNING!

- If cables have to be fed through metal walls or other walls with sharp edges, use ducts or wire bushings to prevent damage.
- Do not lay cables which are loose or bent next to electrically conductive material (metal).
- Do not pull on the cables.
- Do not lay the 230 V mains cable and the 12/24 V⎓ cable in the same duct.
- Fasten the cables securely.
- Lay the cables so that they cannot be tripped over or damaged.

2.3 Operating the appliance safely

WARNING!

- Operate the device only if you are certain that the housing and the cables are undamaged.
- Even after the fuse triggers, parts of the inverter remain live.
- Always disconnect the power supply when working on the device.

NOTICE!

- Make sure the air inlets and outlets of the device are not covered.
- Ensure good ventilation.
- Do **not** connect the 230 V output of the inverter (fig. 3 4, page 4) to a different 230 V source.

3 Scope of delivery

No. in fig. 1, page 3	Description
1	Inverter
2	Holders **MSP 702**, **MSP 704**, **MSP 1012**, **MSP 1024**, **MSP 1512**, **MSP 1524:** 4 holders **MSP 2012**, **MSP 2024**, **MSP 2512**, **MSP 2524:** 6 holders
3	Connection cable with safety plug (for 230 V∼ supply)
4	Connection cable with safety coupling (for 230 V∼ output)
5	Exhaust adapter **MSP 702**, **MSP 704**, **MSP 1012**, **MSP 1024**, **MSP 1512**, **MSP 1524:** one exhaust adapter each **MSP 2012**, **MSP 2024**, **MSP 2512**, **MSP 2524:** two exhaust adapters each.
6	Cable socket
7	Hexagon socket wrench
–	Fastening material
–	Operating instructions

4 Accessories

Available as accessory (not included in scope of delivery):

Description	Item number
Remote control	MCR-7
Remote control	MCR-9

5 Target group for this manual

The “Connecting the inverter” on page 46 chapter is intended exclusively for trained professionals who are familiar with the relevant VDE (German Engineering Society) regulations.
All other chapters are intended for the users of the device.

6 Intended use

The SinePower inverters are used to convert a direct current of 12 V or 24 V into a 230 V∼ supply of 50 Hz.

- **12 V:**
  SinePower MSP 702, Item no. MSP700-012
  SinePower MSP 1012, Item no. MSP1000-012
  SinePower MSP 1512, Item no. MSP1500-012
  SinePower MSP 2012, Item no. MSP2000-012
  SinePower MSP 2512, Item no. MSP2500-012
- **24 V:**
  SinePower MSP 704, Item no. MSP700-024
  SinePower MSP 1024, Item no. MSP1000-024
  SinePower MSP 1524, Item no. MSP1500-024
  SinePower MSP 2024, Item no. MSP2000-024
  SinePower MSP 2524, Item no. MSP2500-024

WARNING! Danger of electrocution!
Never use the inverter on vehicles where the positive terminal of the battery is connected to the chassis.

7 Technical description

The inverters can be operated wherever

- a 12 V⎓ connection
  (SinePower MSP 702, MSP 1012, MSP 1512, MSP 2012, MSP 2512)
- a 24 V⎓ connection
  (SinePower MSP 704, MSP 1024, MSP 1524, MSP 2024, MSP 2524)

is available. The light weight and compact construction of this device allow for easy installation in mobile homes, commercial vehicles or motor and sailing yachts.

The output voltage corresponds to the household voltage from the socket (pure sine wave).

The inverter has a 230 V∼ priority circuit. If an external 230 V∼ voltage is connected, this will have priority. If no external 230 V∼ voltage is connected, then the connected battery will be used as the power supply.

Please observe the values for constant output power and peak output power as indicated in “Technical data” on page 55. Never connect devices that have a higher power requirement.

NOTE
Note when connecting devices with an electrical drive (such as power drills and refrigerators), that they often require more power than is indicated on the type plate.

The inverter has various protective mechanisms.

- **High voltage shutdown:** The inverter shuts itself off when the voltage exceeds the cut-off value. It restarts when the voltage returns to the restart value.
- **Low voltage shutdown:** The inverter shuts itself off when the voltage sinks below the cut-off value. It restarts when the voltage rises to the restart value.
- **High temperature shutdown:** The inverter switches off when the temperature inside the device or the temperature on the cooling element exceeds a cut-off value. It restarts when the temperature returns to the restart value.

NOTE
The individual values are found in “Technical data” on page 55.

The inverter can be switched into an energy saving mode (Standby), so that the battery connected to the inverter does not discharge too quickly.

The inverter can be connected to an exhaust system with the included exhaust adapter. This allows the warm exhaust to be diverted outside.

The connection cable can be attached to the back of the device via the cable socket.

The inverter can be turned on and off with an external switch (not included in package).

The manufacturer offers a remote control as an accessory for the inverter.

7.1 Description of the device

The inverter has the following connections, display and control elements:

No. in fig. 2, page 4	Element
1	Main switch 0 / Off: device is switched off I / On: device is switched on II / Remote: Device can be turned on and off with an external switch or controlled with a remote control (accessory)
2	The “Power Status” LED displays the operational status
3	The “Load Level” LED displays the power being supplied
4	The “Input Level” LED displays the input voltage range
5	Drill holes for securing the exhaust adapter

No. in fig. 3, page 4	Element
1	DIP switch for switching to energy-saving mode
2	Fuse
3	230 V∼ input jack
4	230 V∼ output jack
5	Earth terminal
6	Remote Port II for connecting a remote control (accessory)
7	Remote Port I for connecting to an external switch, for turning the device on and off
8	DC terminal (positive pole)
9	DC terminal (negative pole)

7.2 Status indications

“Input Level” LED (fig. 2 4, page 4)

The “Input Level” LED shows the present range of the input voltage.

Display	Input voltage	
	MSP 702, MSP 1012, MSP 1512, MSP 2012, MSP 2512	MSP 704, MSP 1024, MSP 1524, MSP 2024, MSP 2524
Red, slowly flashing	10.3 – 10.6 V	20.5 – 21.2 V
Red	10.6 – 11.0 V	21.2 – 21.8 V
Orange	11.0 – 12.1 V	21.8 – 24.1 V
Green	12.1 – 14.2 V	24.1 – 28.6 V
Orange, flashing	14.2 – 15.0 V	28.6 – 30.0 V
Red, flashing	> 15.0 V	> 30.0 V

“Load Level” LED (fig. 2 3, page 4)

The “Load Level” LED shows the power presently being supplied by the inverter.

Display	Power		
	MSP 702 MSP 704	MSP 1012 MSP 1024	MSP 1512 MSP 1524
Off	0 – 56 W	0 – 80 W	0 – 120 W
Green	56 – 230 W	80 – 330 W	120 – 495 W
Orange	230 – 525 W	330 – 750 W	495 – 1125 W
Red	525 – 672 W	750 – 960 W	1125 – 1450 W
Red, flashing	> 672 W	> 960 W	> 1450 W

Display	Power	
	MSP 2012 MSP 2024	MSP 2512 MSP 2524
Off	0 – 160 W	0 – 240 W
Green	160 – 660 W	240 – 990 W
Orange	660 – 1500 W	990 – 2250 W
Red	1500 – 1920 W	2250 – 2880 W
Red, flashing	> 1920 W	> 2880 W

“Power Status” LED (fig. 2 2, page 4)

The “Power Status” LED shows the operating status of the inverter.

Display	Input voltage
Orange, constantly lit	Normal operation with battery power supply
Orange, slowly flashing	Energy-saving mode
Green, constantly lit	external supply via 230 V∼ voltage
Red, quickly flashing	Input voltage too high
Red, slowly flashing	Input voltage too low
Red, occasionally flashing	Overheating
Red, constantly lit	Excessive load

8 Fastening the inverter

You can fasten the inverter using the holders supplied.

When selecting the installation location, observe the following instructions:

- The inverter can be mounted horizontally or vertically.
- The inverter must be installed in a place that is protected from moisture.
- The inverter may not be installed in the presence of flammable materials.
- The inverter may not be installed in a dusty environment.
- The place of installation must be well-ventilated. A ventilation system must be present for installations in small, closed spaces. The minimum clearance around the inverter must be at least 25 cm.
- The air intake on the underside or the air outlet on the back side of the inverter must remain clear.
- For ambient temperatures higher than 40 °C (such as in engine or heating compartments, or direct sunlight), the heat from the inverter under load can lead to the automatic shut-off of the inverter.
- The installation surface must be level and sufficiently strong.
  You must be able to support the weight of the inverter.
- Make sure you have adequate space for the cable connections underneath the device when choosing a mounting location.

NOTE
With the cable socket, you can secure the connection cable to the back side of the device. After running the cable, secure it with cable ties to the clips on the cable socket.

NOTICE!
Before drilling any holes, ensure that no electrical cables or other parts of the vehicle can be damaged by drilling, sawing and filing.

Fastening the inverter horizontally

➤ Clip two holders on the left bar and two on the lower right bar (fig. 4, page 5).
You can move the holders as required.

➤ Fasten the inverter by screwing one screw through each hole in the holders.

➤ Lay the cable socket (fig. 5 1, page 5) with the clip over the edge on the back side of the inverter (fig. 5 2, page 5).

➤ Screw the cable socket on with one screw in each of the four holes.

Fastening the inverter vertically

➤ Clip two holders on the left bar and two on the lower right bar (fig. 4, page 5).
You can move the holders as required.

➤ Screw the cable socket (fig. 6 1, page 6) on to the wall with one screw in each of the four holes.

➤ Slide the inverter (fig. 6 2, page 6) onto the cable socket, so that the edge on the back of the inverter is pinched between the wall and the clip on the cable socket.

➤ Fasten the inverter by screwing one screw through each hole in the holder.

9 Connecting the inverter to the exhaust system

You can connect the inverter to an exhaust system. Thereby the warm exhaust is driven out of the internal chamber.

➤ Set the exhaust adapter (fig. 7 2, page 6) on the front side of the inverter (fig. 7 1, page 6) over the fan, so that the screws fit into the screw holes.

➤ Attach the exhaust adapter using the supplied screws.

➤ Connect the hose support (not included, fig. 7 3, page 6) to the exhaust adapter.

➤ Attach the exhaust system hose (fig. 7 4, page 6) to the hose support.

NOTE
SinePower MSP 2012, MSP 2024, MSP 2512 and MSP 2524 are equipped with two fans. With these devices, mount an exhaust adapter in front of each fan and attach an exhaust hose.

10 Connecting the inverter

WARNING! Danger of electrocution!
Incorrectly connecting the inverter can be fatal for the user. The device can only be connected by a trained professional who is familiar with the relevant VDE (German Engineering Society) regulations.

This chapter is solely intended for trained professionals who are familiar with the relevant VDE (German Engineering Society) regulations!

10.1 Notes on connecting

WARNING! Danger of electrocution!

- Never use the inverter on vehicles where the positive terminal of the battery is connected to the chassis.
- If you wish to connect more than one user to the inverter and install a socket distributor loop, you must arrange a circuit breaker (residual current circuit breaker) and set a grounding bridge in the inverter, see “Connect multiple appliances” on page 49.

- When installed in vehicles or boats, the inverter must be connected to the chassis or earth.

- Before connecting, set the main switch (fig. 2 1, page 4) to “Off”.
- When setting up a socket distribution circuit (mains set-up), you must comply with VDE 0100.
- Only use copper cables.
- Keep the cables as short as possible. The cables cannot be longer than 1.8 m.
- After running the cable, secure it with cable ties to the clips on the cable socket.
- Keep to the required cable cross section and fit a cable fuse as close to the battery as possible on the positive cable (see table).

NOTICE!
If you do not fit a fuse to the **positive cable**, the cables can overload, which might result in a fire.

Device	Required cable cross section	Cable fuse
MSP 702	25 mm²	100 A
MSP 704	15 mm²	50 A
MSP 1012	35 mm²	200 A
MSP 1024	25 mm²	100 A
MSP 1512	35 mm²	200 A
MSP 1524	25 mm²	100 A
MSP 2012	70 mm²	250 A
MSP 2024	55 mm²	150 A
MSP 2512	95 mm²	400 A
MSP 2524	70 mm²	200 A

10.2 Connecting the inverter to the battery

NOTICE!
Do not reverse the polarity. Reversing the polarity of the battery connections will cause a great spark and the internal fuses will melt. The fuses should only be replaced by an electrician!

NOTE
Tighten the nuts and bolts to a torque of 12 – 13 Nm. Loose connections may cause overheating.

- ➤ Set the main switch (fig. 2 1, page 4) to “Off”.
- ➤ Unscrew the four fastening screws (fig. 8 2, page 7) from the back side of the device with the included hexagon socket wrench.
- ➤ Take off the hood (fig. 8 1, page 7).
- ➤ Guide the plus cable through the “POS (+)” opening and the minus cable through the “NEG (–)” opening in the hood.
- ➤ Loosen the safety bolt slightly(fig. 8 3, page 7).
- ➤ Push the cable lug (fig. 8 5, page 7) of the positive cable between the spring washer (fig. 8 4, page 7) and the positive terminal (fig. 8 6, page 7).
- ➤ Screw the safety bolt back in.
- ➤ Connect the negative cable to the negative terminal (fig. 8 7, page 7).
- ➤ Connect the earth terminal (fig. 3 5, page 4) to the chassis with a cable having a diameter of at least 16 mm².
- ➤ Replace the hood of the device and tighten the screws.
- ➤ Lay the positive cable from the inverter to the positive terminal of the vehicle battery and connect it there.
- ➤ Lay the negative cable from the inverter to the negative terminal of the vehicle battery and connect it there.

10.3 Connecting the 230 V power cable

- ➤ Connect the 230 V∼ connection cable with safety coupling (fig. 1 3, page 3) to the 230V∼ output jack (fig. 3 3, page 4).
- ➤ Connect the safety plug to the 230 V∼ mains

10.4 Connect the 230V output cables

WARNING! Danger of electrocution!
Before connecting the 230V∼ output cable make sure the inverter is switched off at the main switch.

➤ Connect the 230 V∼ connection cable with safety coupling (fig. 1 4, page 3) to the 230V∼ output jack (fig. 3 4, page 4).

10.5 Connect multiple appliances

The device is equipped at delivery with galvanic isolation. For the safe operation of multiple appliances, it is essential that a circuit breaker (residual current circuit breaker) is built into the socket distribution circuit, see sample circuit diagram in fig. 10, page 8.

Sample circuit diagram legend:

No. in fig. 10, page 8	Explanation
1	230 V∼ power source
2	additional devices, e.g. battery charger, refrigerator
3	DC power source (battery)
4	Inverter
5	Set grounding bridge (At delivery: not set, shown by dotted line)
6	Circuit breaker (residual current circuit breaker)
7	Socket distribution circuit for appliances

WARNING! Danger of electrocution!
If you wish to connect more than one appliance to the inverter and install a socket distribution circuit, you must arrange a circuit breaker (residual current circuit breaker) and set a grounding bridge in the inverter.

➤ Install a residual current circuit breaker in the socket distribution circuit.

Set grounding bridge

➤ Unscrew the four fastening screws (fig. 9 2, page 7) from the back side of the device with the included hexagon socket wrench.

➤ Take off the hood (fig. 9 1, page 7).

➤ Unscrew the grounding screw (fig. 9 4, page 7).

➤ Screw the screw into the pre-drilled hole to the left (fig. 9 3, page 7).

➤ Replace the hood of the device and tighten the screws.

10.6 Install external switch to turn device on and off

NOTE
Connect the external switch to the inverter using a connection cable with Western telephone jack. Observe the PIN configuration on the plug for the connection cable.

➤ Cut a connection cable to size according to the following circuit diagrams:
- external switch, voltage supply from the inverter: fig. 11, page 9
- Control unit with relay or transistor circuit (TR): fig. 12, page 9
- external switch with voltage supply from the battery (BAT) of the vehicle: fig. 13, page 9
- external switch with its own voltage supply (DC POWER) e.g. from the ignition: fig. 14, page 9

➤ Connect the external on/off switch with the connection cable on the remote port (fig. 3 7, page 4).

10.7 Connecting the remote control (accessory)

NOTICE! Risk of damage!
Attach the connection to the remote control **only in the Remote-Port II** and not in the Remote-Port I. False connections can damage the device!
Ensure that the remote control and inverter require the same input voltage!

➤ Connect the remote control (accessory) to the Remote Port II (fig. 3 6, page 4).

11 Using the inverter

➤ Connect your appliance to the inverter.

Switch on at the device

➤ Set the main switch (fig. 2 1, page 4) to the “ON” position.

✓ During the self-test,
the built-in speaker emits tones and the LEDs flash in various colours.

✓ After the self-test, the “Input Level” (fig. 2 4, page 4) and “Status” (fig. 2 2, page 4) LEDs light up green.

Using an external switch or remote control (accessory).

You can also switch the inverter on and off with a connected external switch or with a remote control (accessory).

➤ Set the main switch (fig. 2 1, page 4) to “Remote”.

✓ If the inverter is switched on via an external switch or the remote control, the green “Power Status” LED (fig. 2 2, page 4) lights up.

Observe the following when using the device (see also “Troubleshooting” on page 53)

The inverter switches off if:

- The battery voltage falls below 10.5 V / 21 V
- The battery voltage rises above 15.3 V / 30.6 V
- the inverter overheats,
- there is an overload (short circuit).

NOTE
If the device is operated at too high a load, there may be repeated attempts to switch on. As soon as the device is correctly operated again, the inverter automatically switches on again (recovery function). If the condition is still not satisfactory after several minutes, switch off the inverter and inspect the connected consumer device.

NOTE
When operating the inverter at a high load for lengthy periods, it is advisable to start the engine in order to recharge the vehicle battery.

11.1 Set energy saving mode (Standby)

In energy saving mode, the inverter does not release any voltage, thereby preserving the battery. If a connected appliance requires power which is more than the pre-set power value, the inverter reverts to normal operation.

You can switch to energy-saving mode using the DIP switches S1, S2 and S3 (fig. 3 1, page 4) and set the power value.

The switch positions for your inverter can be found in the following table:

	Energy-saving mode up to			DIP switch		
	MSP 702 MSP 704	MSP 1012 MSP 1024 MSP 1512 MSP 1524	MSP 2012 MSP 2024 MSP 2512 MSP 2524	S1	S2	S3
Power	Off	Off	Off	Off	Off	Off
	15 W	20 W	40 W	On	Off	Off
	25 W	40 W	80 W	Off	On	Off
	40 W	55 W	125 W	On	On	Off
	50 W	75 W	170 W	Off	Off	On
	65 W	95 W	210 W	On	Off	On
	75 W	115 W	245 W	Off	On	On
	85 W	135 W	280 W	On	On	On

11.2 Switch between 50 Hz and 60 Hz.

The output voltage can be switched between 50 Hz and 60 Hz with the DIP switch S4 (fig. 3 1, page 4).

WARNING! Danger of electrocution!
Only adjust the S4 DIP switch when the respective frequency for the output voltage should be used.

Set the S4 DIP switch (fig. 3 1, page 4) according to the following table:

Output voltage frequency	S4 DIP switch
50 Hz	Off
60 Hz	On

12 Cleaning and caring for the inverter

NOTICE!
Do not use sharp or hard objects or cleaning agents for cleaning as these may damage the product.

➤ Occasionally clean the product with a damp cloth.

13 Troubleshooting

WARNING! Danger of electrocution!
Do not open the device. You risk sustaining an electric shock by doing this.

NOTE
If you have detailed questions on the **specifications of the inverter** please contact the manufacturer.

No output voltage

The “Power Status” LED (fig. 2 2, page 4) displays the fault in red:

LED display	Cause	Remedy
Quick flashing	Input voltage too high	The inverter is only intended for the voltage indicated.
Slow flashing	Input voltage too low	The battery needs charging. Check the cables and connections.
Occasional flashing	Overheating	Switch off the inverter and the appliance. Wait 5 to 10 minutes and switch the inverter on again without any appliances. Reduce the load and make sure the inverter has better ventilation. Then switch the appliance back on.
Constantly lit	Short circuit or reversed polarity Excessive load	Switch off the inverter and remove the appliance. Then switch the inverter back on without the appliance. If no excessive load is now shown, then there is a short circuit in the appliance or the total load was higher than the power specified on the data sheet. Check the cables and connections.

14 Guarantee

The statutory warranty period applies. If the product is defective, please contact the manufacturer's branch in your country (see the back of the instruction manual for the addresses) or your retailer.

For repair and guarantee processing, please include the following documents when you send in the device:

- A copy of the receipt with purchasing date
- A reason for the claim or description of the fault

15 Disposal

➤ Place the packaging material in the appropriate recycling waste bins wherever possible.

If you wish to finally dispose of the product, ask your local recycling centre or specialist dealer for details about how to do this in accordance with the applicable disposal regulations.

16 Technical data

	WAECO SinePower			
	MSP 702	MSP 704	MSP 1012	MSP 1024
Item no.	**MSP700-012**	**MSP700-024**	**MSP1000-012**	**MSP1000-024**
Rated input voltage	12 V⎓	24 V⎓	12 V⎓	24 V⎓
Output power	700 W		1000 W	
Peak output power	1400 W		2000 W	
Output voltage	230 V∼ pure sine wave			
Output frequency	50 Hz			
Idle current consumption	1.2 A	0.6 A	1.25 A	0.65 A
Standby current consumption	0.25 A	0.15 A	0.25 A	0.15 A
Input voltage range	10.5 V – 15 V	21 V – 30 V	10.5 V – 15 V	21 V – 30 V
Efficiency up to	90 %	92 %	90 %	93 %
Ambient temperature for operation	0 °C – 40 °C			
Ambient temperature for storage	–30 °C – +70 °C			
Dimensions W x D x H	190 x 380 x 90 mm		225 x 435 x 117 mm	
Weight	5.5 kg		7.6 kg	

	WAECO SinePower			
	MSP 1512	MSP 1524	MSP 2012	MSP 2024
Item no.	**MSP1500-012**	**MSP1500-024**	**MSP2000-12**	**MSP2000-024**
Rated input voltage	12 V⎓	24 V⎓	12 V⎓	24 V⎓
Output power	1500 W		2000 W	
Peak output power	3000 W		4000 W	
Output voltage	230 V∼ pure sine wave			
Output frequency	50 Hz			
Idle current consumption	1.4 A	0.7 A	2.3 A	1.2 A
Standby current consumption	0.28 A	0.15 A	0.6 A	0.3 A
Input voltage range	10.5 V – 15 V	21 V – 30 V	10.5 V – 15 V	21 V – 30 V
Efficiency up to	90 %	93 %	90 %	93 %
Ambient temperature for operation	0 °C – 40 °C			
Ambient temperature for storage	–30 °C – +70 °C			
Dimensions W x D x H	225 x 465 x 117 mm		349 x 516 x 116 mm	
Weight	8.4 kg		15.5 kg	

	WAECO SinePower	
	MSP 2512	MSP 2524
Item no.	**MSP2500-012**	**MSP2500-024**
Rated input voltage	12 V⎓	24 V⎓
Output power	2500 W	
Peek output power	5000 W	
Output voltage	230 V∼ pure sine wave	
Output frequency	50 Hz	
Idle current consumption	2.4 A	1.5 A
Standby current consumption	0.6 A	0.35 A
Input voltage range	10.5 V – 15 V	21 V – 30 V
Efficiency up to	90 %	93 %
Ambient temperature for operation	0 °C – 40 °C	
Ambient temperature for storage	–30 °C – +70 °C	
Dimensions W x D x H	349 x 546 x 116 mm	
Weight	16.9 kg	

High voltage shutdown

Device	High voltage	
	Shutdown	Restart
MSP 702, MSP 1012, MSP 1512, MSP 2012, MSP 2512	15.3 V	14.3 V
MSP 704, MSP 1024, MSP 1524, MSP 2024, MSP 2524	30.6 V	28.6 V

Low voltage shutdown

Device	Low voltage warning	Low voltage	
		Shutdown	Restart
MSP 702, MSP 1012, MSP 1512, MSP 2012, MSP 2512	11.0 V	10.2 V	12.7 V
MSP 704, MSP 1024, MSP 1524, MSP 2024, MSP 2524	22.0 V	20.3 V	25.4 V

High temperature shutdown

Internal temperature		Temperature on cooling element	
Shutdown at	Restart at	Shutdown at	Restart at
70 °C	45 °C	90 °C	60 °C

Certifications

The device has the e13 certification

Variations, technical improvements and delivery options reserved.

Dometic GROUP

(D) **Dometic WAECO International GmbH**
Hollefeldstraße 63 · D-48282 Emsdetten
☏ +49 (0) 2572 879-195 · 🖷 +49 (0) 2572 879-322
Mail: info@dometic-waeco.de · Internet: www.dometic-waeco.de

Europe

(A) **Dometic Austria GmbH**
Neudorferstrasse 108
2353 Guntramsdorf
☏ +43 2236 908070
🖷 +43 2236 90807060
Mail: info@waeco.at

(CH) **Dometic Switzerland AG**
Riedackerstrasse 7a
CH-8153 Rümlang (Zürich)
☏ +41 44 8187171
🖷 +41 44 8187191
Mail: info@dometic-waeco.ch

(DK) **Dometic Denmark A/S**
Nordensvej 15, Taulov
DK-7000 Fredericia
☏ +45 75585966
🖷 +45 75586307
Mail: info@waeco.dk

(E) **Dometic Spain S.L.**
Avda. Sierra del Guadarrama, 16
E-28691 Villanueva de la Cañada
Madrid
☏ +34 902 111 042
🖷 +34 900 100 245
Mail: info@dometic.es

(F) **Dometic S.N.C.**
ZA du Pré de la Dame Jeanne
F-60128 Plailly
☏ +33 3 44633500
🖷 +33 3 44633518
Mail: info@dometic.fr

(FIN) **Dometic Finland OY**
Mestarintie 4
FIN-01730 Vantaa
☏ +358 20 7413220
🖷 +358 9 7593700
Mail: info@dometic.fi

(I) **Dometic Italy S.p.A.**
Via Virgilio, 3
I-47100 Forlì
☏ +39 0543 754901
🖷 +39 0543 756631
Mail: info@dometic.it

(N) **Dometic Norway AS**
Skolmar 24
N-3232 Sandefjord
☏ +47 33428450
🖷 +47 33428459
Mail: firmapost@waeco.no

(NL) **Dometic Benelux B.V.**
Ecustraat 3
NL-4879 NP Etten-Leur
☏ +31 76 5029000
🖷 +31 76 5029090
Mail: info@dometic.nl

(PL) **Dometic Poland Sp. z o.o.**
Ul. Puławska 435A
02-801 Warszawa
Poland
☏ +48 22 414 32 00
🖷 +48 22 414 32 01
Mail: info@dometic.pl

(RUS) **Dometic RUS LLC**
Komsomolskaya square 6-1
107140 Moscow
Russia
☏ +7 495 780 79 39
🖷 +7 495 916 56 53
Mail: info@dometic.ru

(S) **Dometic Scandinavia AB**
Gustaf Melins gata 7
S-42131 Västra Frölunda (Göteborg)
☏ +46 31 7341100
🖷 +46 31 7341101
Mail: info@waeco.se

(SK) **Dometic Slovakia s.r.o.**
Tehelná 8
SK-98601 Fiľakovo
☏ +421 47 4319 107
🖷 +421 47 4319 166
Mail: info@dometic.sk

(UK) **Dometic UK Ltd.**
Dometic House · The Brewery
Blandford St. Mary
Dorset DT11 9LS
☏ +44 844 626 0133
🖷 +44 844 626 0143
Mail: sales@dometic.co.uk

Overseas + Middle East

(AUS) **Dometic Australia**
1 John Duncan Court
Varsity Lakes QLD 4227
☏ +61 7 55076000
🖷 +61 7 55076001
Mail: sales@dometic-waeco.com.au

(HK) **WAECO Impex Ltd.**
Suites 2207-2211 · 22/F · Tower 1
The Gateway · 25 Canton Road,
Tsim Sha Tsui · Kowloon
Hong Kong
☏ +852 24611386
🖷 +852 24665553
Mail: info@dometic-waeco.com.hk

(ROC) **WAECO Impex Ltd.**
Taipei Office
2 FL-3 · No. 56 Tunhua South Rd, Sec 2
Taipei 106, Taiwan
☏ +886 2 27014090
🖷 +886 2 27060119
Mail: marketing@dometic-waeco.com.tw

(UAE) **Dometic AB**
Regional Office Middle East
P O Box 74775
Dubai, United Arab Emirates
☏ +971 4 321 2160
🖷 +971 4 321 2170
Mail: info@dometic.ae

(USA) **Dometic Marine Division**
2000 N. Andrews Ave. Extension
Pompano Beach, FL 33069 USA
☏ +1 954 973 2477
🖷 +1 954 979 4414
Mail: marinesales@dometicusa.com

3.03.20.01618 05/2012